Alternators, Starters & Parts

A Polish company, located in Gdańsk and operating on the world market for starters and alternators.

A leader in the automotive aftermarket in Poland.

as-pl.com

OUR MISSION

„Providing top-quality goods tailored to the market expectations while using state-of-the-art technologies."

KNOW OUR COMPANY

AS-PL Sp. z o.o. is a European company which operates in the field of supplying parts and electrical components for vehicles.

The company was established in 1992 in Gdańsk under the name Auto-Starter. Currently, the company employs over **290** qualified professionals and cooperates with aftermarket distributors and wholesalers of spare parts and accessories for vehicles all over the world.

Long-term cooperation and selling about **100** countries in the world make the company a leader in the field of supplying parts and electrical components for vehicles.

HISTORY

1992
company's establishment

2004
creating **AS** brand

2013
a new company Headquarters and warehouse space of 5000 m² in Gdańsk

2015
joining the TecDoc catalogue under the name **AS-PL**

2015
obtaining an ISO 9001

2016
the opening of a Production Plant and warehouse space of 5000 m² in Lubichowo, near Starogard Gdański

2017
the establishment of a new Company **AS-PL UK Ltd.** on the British market

AS-PL UK Ltd.

2018
joining the MAM AutoCat v8 catalogue

2018
a new office for the Sales Department and another 3000 m² warehouse in Gdańsk

2019
the opening of a new Branch Office **AS-PL Italia s.r.l.**

AS-PL ITALIA S.R.L.

From the left:

Tomasz Kaszubowski
Vice President of the Management Board

Danuta Kaszubowska
President of the Management Board

Andrzej Kaszubowski
Vice President of the Management Board

„For generations we've been powered by passion"

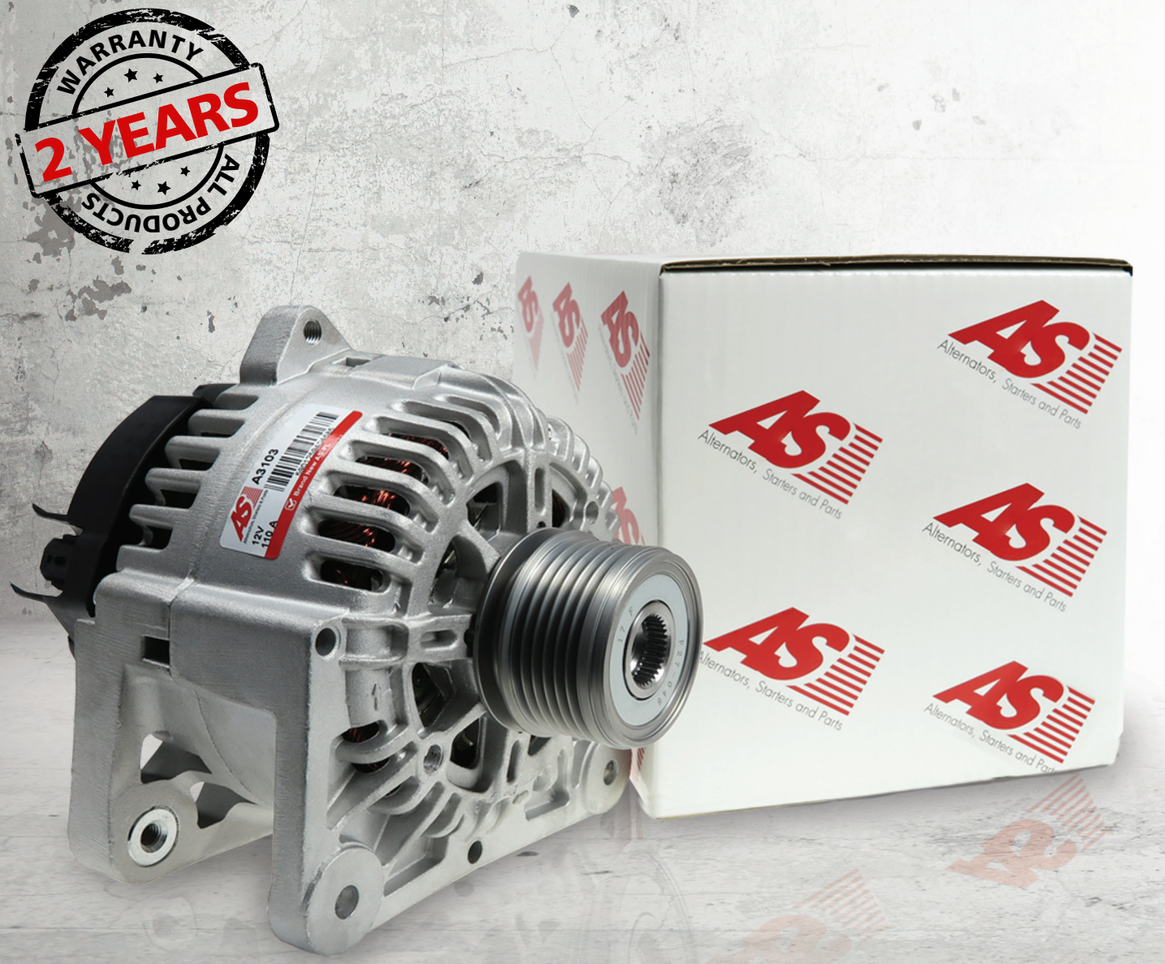

WARRANTY
2 YEARS
ALL PRODUCTS

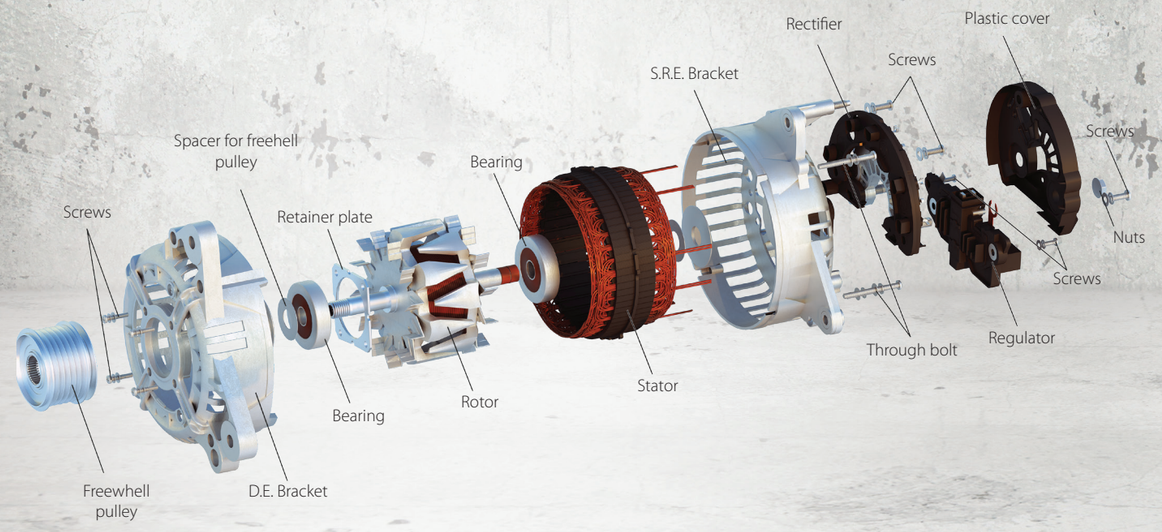

AS-PL offers more than 3,400 types of alternators for various vehicles:

passenger cars, lorries, agricultural machines, boats, motorcycles and for the industrial market.

Alternator – operating principle:

An alternator is an AC used to change mechanical energy into alternating current. Inside an alternator, electric current is produced in stator windings by the rotating magnetic field of a rotor.

It is commonly used in mechanical vehicles as a source of electricity. Nowadays, alternators are digitally controlled so their quality control requires using state-of-the-art machinery.

Tidbit

A battery is an inherent component of both older and modern vehicles. A battery that supplies electricity to the whole vehicle requires charging. This is where an alternator comes in handy. The first alternator was constructed and patented by Nikola Tesla in the USA in 1891. Currently, every single car is equipped with one.

AS-PL offers more than 3,000 types of starters

for passenger cars, lorries, agricultural machines, boats, motorcycles and for the industrial market.

Starter – operating principle:

A starter is a device used to start an internal combustion engine. Electric starters are the most common.

An electric starter is a direct current motor used to rotate the engine crankshaft and provide a proper rotational speed so as to initiate the engine's operation under its own power. Internal combustion engine starters require the greatest amount of electricity from the battery, however only for a short period while starting the engine.

Tidbit

An electric starter is necessary as internal combustion engines are unable to start on their own. Therefore, the starter has to rotate the crankshaft several times in order to enable it to start. Born in 1876 in Loundonville, USA, Karol Franklin Kettering was the inventor of the electric starter which replaced the hand crank starter.

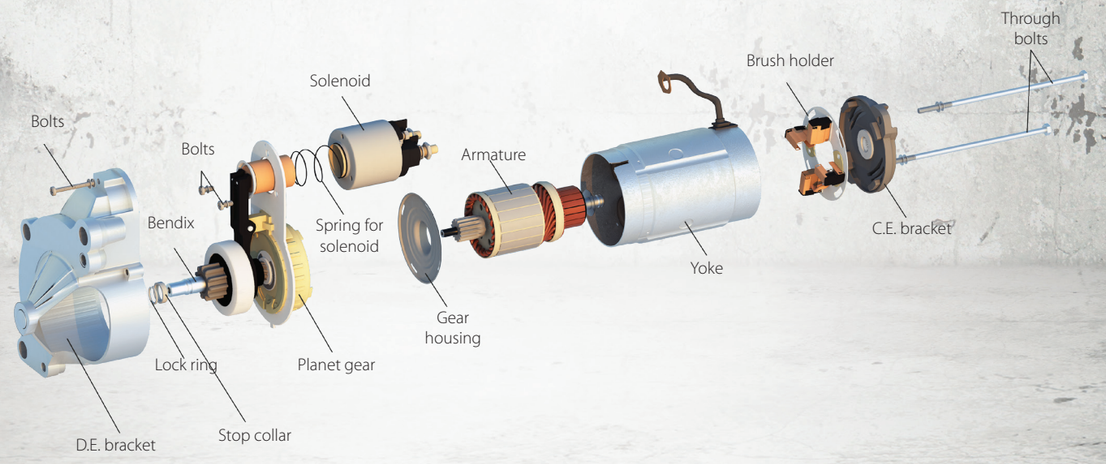

TESTED WITH 100% TESTED D&V ELECTRONICS LTD. № 1 D&V TESTERS

AS-PL offers more than 13,600 parts and components divided into the following groups:

alternator parts, starter parts, bearings and seals, ignition system components and others (machines and parts, gaskets, radial shaft seals, O-rings, brushes, etc.)

In total, the company offers

more than 20,000 different products

with a total of almost 450,000 reference numbers in order to provide our customers with a wide selection of original products and their replacements at favourable prices.

The products are divided into three product lines:

Premium Line
the option addressed to the customers who are looking for the best quality. Products supplied by world-class OEM (Original Equipment Manufacturer) manufacturers and selected products of AS brand.

Standard Line
the leading product line of the AS brand, option directed to the customers looking for high quality and reliable products at a competitive prices.

Economy Line
the line of products that merge the quality at a reasonable price.

Such a wide selection of products enabled the AS-PL company to become one of the leading suppliers (producers) in the worldwide spare parts industry.

MORE THAN 20,000

DIFFERENT PRODUCTS

CONTINUOUS STOCK AVAILABILITY

REMANUFACTURING

In response to our customers' demands and continuous development in the automotive industry, the company introduced starter and alternator refurbishing to its range of services.

Current capacity of remanufacturing product assembly equal to around 12 000 pieces per year.

The remanufacturing process consists of a few stages, among others: a preliminary analysis of the condition and classification of the so-called product core, product selection and a final testing.

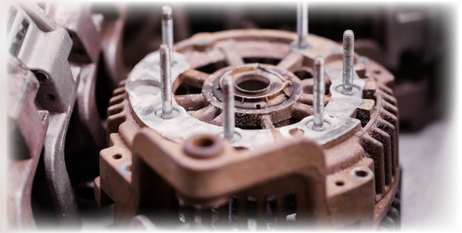

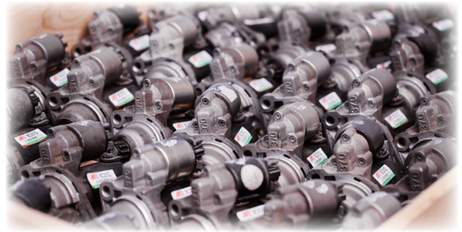

PRODUCTION AND WAREHOUSE BUILDING

LUBICHOWO
NEAR STAROGARD GDAŃSKI

In 2004, products manufactured under the own brand name „AS" were introduced.

In **2013**, the company's main office was moved to a modern building in Gdańsk, where a warehouse with 5000 m^2 of storage space is located as well.

In **2016**, a modern facility was built in Lubichowo near Starogard Gdański. It houses state-of-the-art production lines and a warehouse with nearly 5000 m^2 of storage and administrative space. The building features innovative solutions and specialist machinery supplied by Canadian D&V Electronics (ST-16, ST-24, ST-116, ALT-98, ALT-198) and Dutch Motoplat. These testing machines were purchased in order to control and improve the quality of AS-PL's products.

Due to the dynamic growth of the company in **2018**, the trading department was moved to a new facility in Gdańsk which also has a 3000 m^2 warehouse.

QUALITY CONTROL IS OUR **HIGHEST PRIORITY**

Goods offered by the company

undergo strict testing procedures and meet the highest requirements

in relation to their assembly and technical parameters.

Supplying reliable products tailored to current market expectations while using state-of-the-art technologies is the company's most important goal and mission.

In 2015, the company introduced quality management systems in compliance with ISO 9001:2008 requirements The TÜV Rheinland® Certificate is confirmation that the operation of the organisation is run at high quality standards. I**n 2018, AS-PL positively passed the control assessing the implementation of the ISO 9001:2015 certificate.**

In 2016, the company obtained an EAC Certificate.
This certificate confirms product compliance with the norms and standards of quality and safety applicable on markets belonging to the Customs Union; i.e. Russia, Kazakhstan, Belarus, Armenia and Kirghistan.

All alternators and starters offered by the company are tested using specialist machinery. The test results are included in the product packaging.

QUALITY CONTROL

TESTING ON MACHINES

D & V ELECTONICS

ST - 16, ST - 24, ST -116, ALT - 98, ALT - 198

In order to meet our Customers' needs and expectations,

we created an online catalogue

that enables them to search for necessary parts quickly and easily. The catalogue is available at: as-catalog.com and on the company website.

To reduce our carbon footprint, we decided to not provide printed catalogues. A specialist mobile application, AS-PL Catalogue, is available in order to facilitate selection of the proper components.

You can download it from Google Play™ and App Store®.
The "AS" brand is also available in the TecDoc™
and MAM Software Autocat v8 catalogues under the name AS-PL.

GET IT ON Google Play

Download on the App Store

TecDoc DATA SUPPLIER

Autocat v8 Electronic Parts Catalogue MAM SOFTWARE

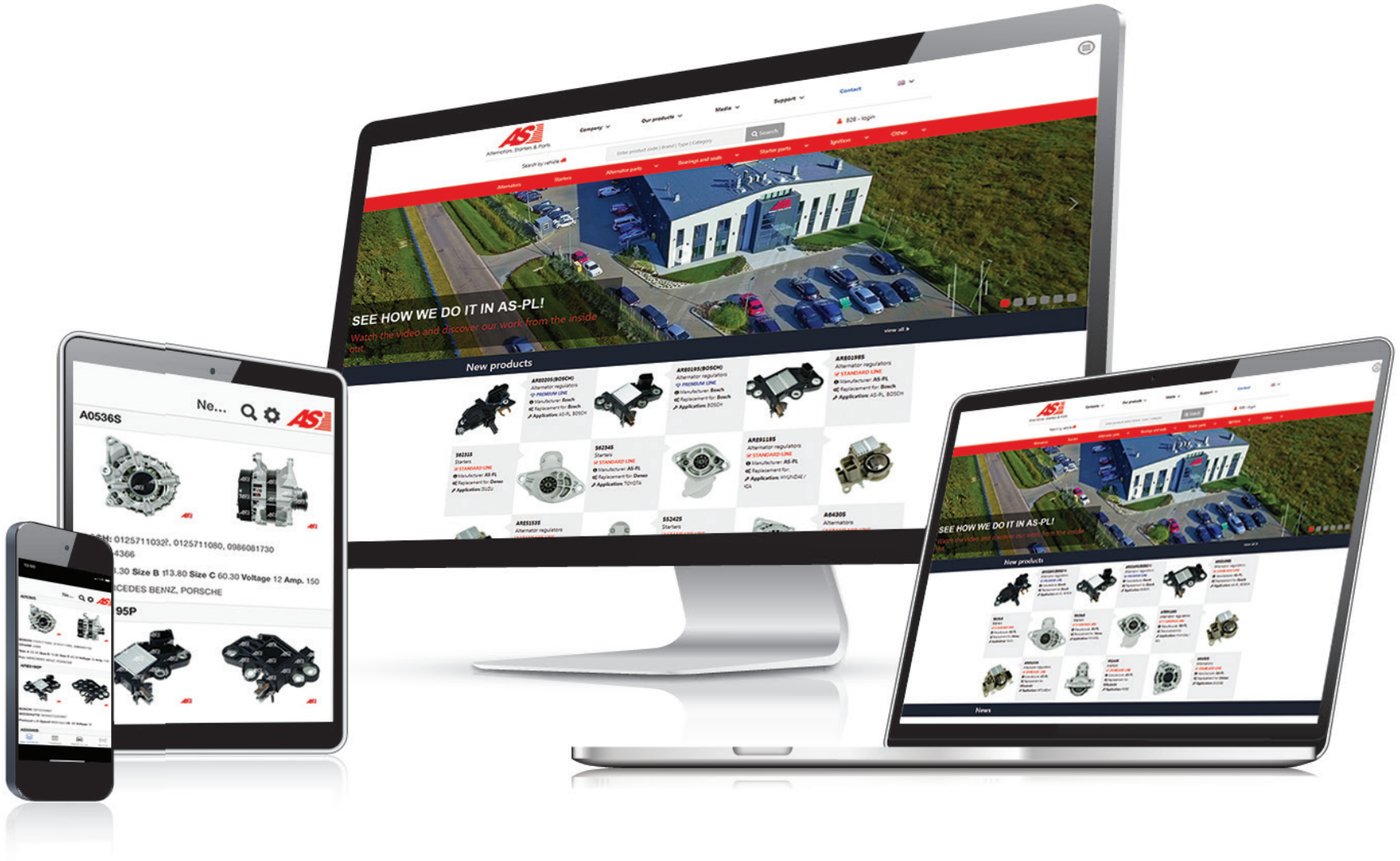

SUPPORT FOR A CUSTOMER

AS-PL Sp. z o.o.'s Customer's, apart from the final product, also receive full, tailor-made support.

We offer our Customer's an individual approach and help at every stage of the preparation of an offer.

Customer's receive a package of information related to: reference numbers, OE symbols, service numbers, product photos, information on their use, circulation of statistical data and additional technical help via the phone.

AS-PL also does its best to shape a Customer's satisfaction with a reliable, experienced and effective team as well as modern software.

SELECTED **DEVELOPMENT DIRECTIONS**

In 2016, AS-PL became a member of the P**olish Association of Distributors and Manufacturers of Automotive Parts (SDCM)** which belongs to the biggest European Organisations connected with this sector - **CLEPA and FIGIEFA**. They have a genuine influence on different legislative decisions that concern the field at an international level.

Currently, the organisation represents over 100 of the biggest players of the Industry and Market of automotive parts.

In 2017, this dynamic growth led to establishing a new Company, **AS-PL UK Ltd.** operating on the British market. At the end of last year, the Company became a certified member of **IAAF (The Independent Automotive Aftermarket Federation)**, which corresponds to Polish SDCM.

In August 2019, AS-PL has become the official supplier of the **Groupauto Polska** purchasing group for the largest domestic car parts distributors.

To increase the competitiveness of our offer and increase the recognition of the AS brand in this part of Europe, in November 2019 the **AS-PL Italia Branch Office** was opened. It is located in the town of Moncalieri near Turin in Northern Italy.

We participate actively in social media, such as:

On the occasion of the 25th anniversary of the company in 2017, there was an unconventional film: "Alternator Love Story" which can be seen on our YouTube channel.

SDCM STOWARZYSZENIE DYSTRYBUTORÓW I PRODUCENTÓW CZĘŚCI MOTORYZACYJNYCH

INDEPENDENT AUTOMOTIVE AFTERMARKET FEDERATION

apra

AS-PL participates in many automotive trade fairs both in Poland as well as around the world.

In **2001**, the Company had its debut with a booth at the International Poznań Fair.

Currently, **AS-PL** exhibits its booth every year at prestigious trade fairs around the world. In recent years, the Company has exhibited its booth in the following countries: Germany, England, Russia, Iran, Bosnia and Herzegovina, France, Holland, Algeria, Brasil, SAR, Slovenia and Italy.

Alternators, Starters & Parts

Headquarters:
AS-PL Sp. z o.o.
ul. Michałki 32
80-716 Gdańsk
Poland

Sales Department:
AS-PL Sp. z o.o.
Panattoni Park Gdańsk IV
ul. Elbląska 130 / Building 2
80-718 Gdańsk
Poland

UK Departament:
AS-PL UK Ltd.
590 Kingston Road
SW20 8DN
London UK

Branch Office IT:
AS-PL Italia s.r.l.
Via Cavalieri del Lavoro 2/6
10024 Moncalieri TO
Italia

Production Plant:
AS-PL Sp. z o.o.
ul. Słoneczna 53
83-240 Lubichowo
Poland

Tel.: +48 58 304 12 85
info@as-pl.com
as-pl.com

01/2021

©2021 AS-PL Sp. z o.o.

All copyrights reserved. Reproduction of a part or all of the contents of this document without the prior written permission of the copyright owner is prohibited. The information included in this document is not an offer or a contract in any form. They are deemed as genuine and can be changed without notification. The publisher shall not bear responsibility for any consequences resulting from the use of this information.